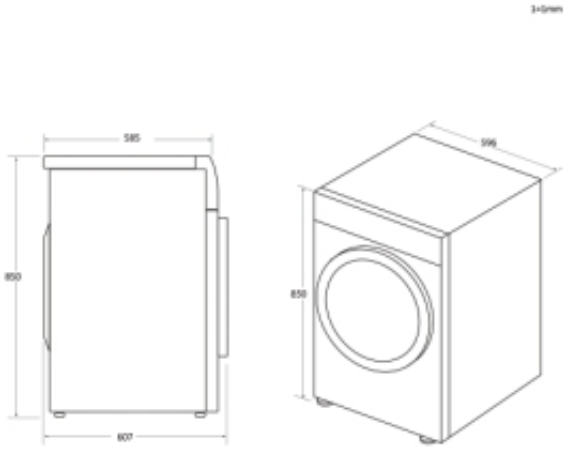

Link

HLE V9DG-80

- ✓ Anticrease
- ✓ Dry all loads at best
- ✓ Start Delay option
- ✓ Woolmark Certification
- ✓ Sensor Dry
- ✓ Four Dryness Levels
- ✓ Vented Tumble Dryer

Main Features

Product name / Commercial code	HLE V9DG-80
Product code	31102285
EAN Code	8059019030807
Manufacturer	Candy Hoover Group S.r.l.
Built in / free standing model	Freestanding
Capacity (kg)	9
Dryer type	Vented

Technical features

Connectivity	Extra content and proximity control (NFC)
IoT App	Wizard
Drum material	Galvanized
Drum volume (l)	125
Electronics	Digit
Plug type	UK
Voltage (V)	220-240

Water container position	No

Programs and Functions

Blocked filter indicator	Yes
Drying time selector	Yes
Dryness degree selectable	Yes
End of cycle indicator	Yes
Full tank indicator	No
Number of programmes	15+1
Start delay options	Yes (up to 24h)
Woolmark Approved	No

Aesthetic

Colour	White
Door	Glass
Colour of handle	White

Accessories

Exhaust water pipe	No
Shoe Rack	No

Performance

Energy efficiency class	C
Energy consumption electric dryer, full load	5.34
Energy consumption electric dryer, partial load	2.9
Noise level (dB(A)	67
Annual Energy Consumption (kWh)	636

Dimensions

Product height (mm)	850
Width of the product (mm)	596

Full product depth (mm)	607
Cabinet depth (without pipes and door)	585
Packaged Product Height (mm)	890
Width of the packed product (mm)	650
Packaged Product Depth(mm)	620
Gross weight (kg)	34
Net weight (kg)	32.4