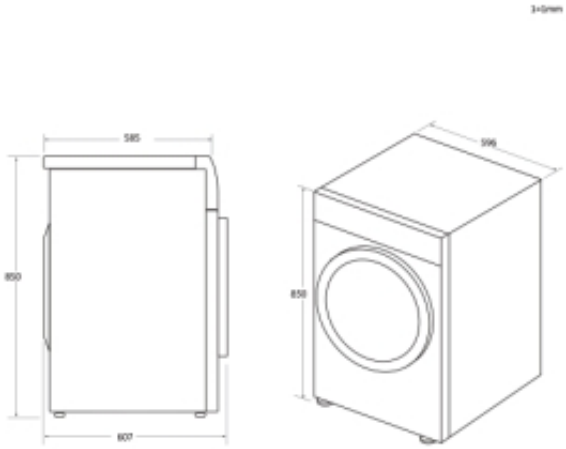

H-DRY 300

HLE H8A2DE-80

- ✓ Best drying program suggested
- ✓ 40 additional cycles
- ✓ Extra functions by hOn App
- ✓ Scan to Care
- ✓ Heat Pump
- ✓ Woolmark Certification
- ✓ Long-lasting durability
- ✓ Best drying program suggested
- ✓ Deep action on your clothes
- ✓ 40 additional cycles

Main Features

Product name / Commercial code	HLE H8A2DE-80
Product code	31102211
EAN Code	8059019027203
Manufacturer	Candy Hoover Group S.r.l.
Built in / free standing model	Freestanding
Capacity (kg)	8
Dryer type	Heat Pump

Technical features

Connectivity	Advanced remote control and extra content (Wi-Fi + BLUETOOTH®)
IoT App	hOn
Drum material	Galvanized
Drum volume (l)	125
Electronics	3 digit display
Plug type	UK
Voltage (V)	220-240

Water container position	In door tank
Motor	AC

Programs and Functions

Blocked filter indicator	Yes
Drying time selector	Yes
Dryness degree selectable	Yes
End of cycle indicator	Yes
Full tank indicator	Yes
Start delay options	Yes (up to 24h)
Woolmark Approved	Yes

Aesthetic

Colour	White
Colour of door	White
Door	Trasparent with Easycase
Colour of handle	White
Knob colour	White

Accessories

Exhaust water pipe	No
Shoe Rack	No

Performance

Energy efficiency class	A++
Condensation efficiency class	B
Energy consumption electric dryer, full load	1.93
Energy consumption electric dryer, partial load	1.08
Noise level (dB(A)	67
Annual Energy Consumption (kWh)	236

Dimensions	
Product height (mm)	850
Width of the product (mm)	596
Full product depth (mm)	607
Cabinet depth (without pipes and door)	585
Packaged Product Height (mm)	890
Width of the packed product (mm)	650
Packaged Product Depth(mm)	620
Gross weight (kg)	40.9
Net weight (kg)	39.3